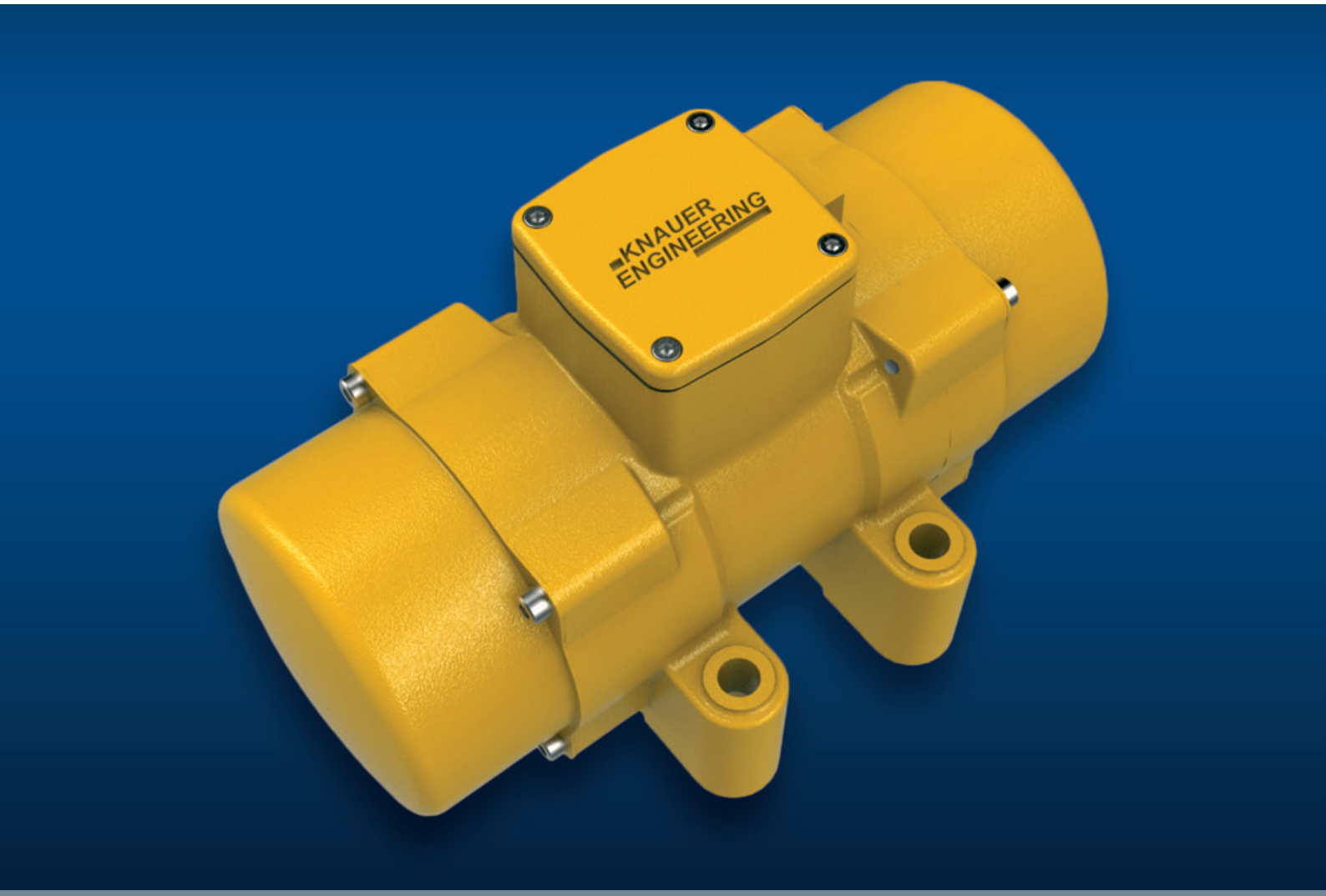

EXTERNAL VIBRATORS

Robust vibrators for
various applications

ENGLISH

Quality advantages in design and construction

If you have questions, do not hesitate to contact us for consultation: **Tel. +49 (0)8171 6295-0**

The KNAUER vibrators, also so-called unbalancing motors or vibration drives, are distinguished by a number of constructive quality characteristics, which makes them suitable for heavy use in a whole series of applications. You as a customer benefit from decades of experience, which the company acquired as an expert in the field of vibration engineering, among others in applications fields like vibrating tables, testing and inspection technology as well as in in the production of concrete elements.

The unbalance motors, which are completely constructed and manufactured in Germany by KNAUER ENGINEERING are characterized in particular through:

1

Solid, robust housings casted as one piece. Depending on the design and the planned application, the housings are made out of nodular graphite cast iron, grey cast iron or die cast aluminium.

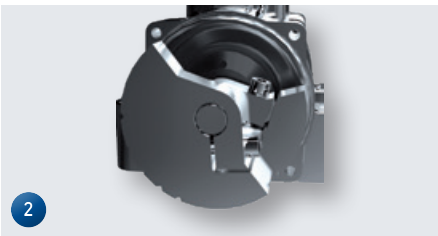

2

The unbalancing weights can be adjusted infinitely variable from 0 to max. force. Good visible marks guarantee a quick and precise adjustment on both sides of the vibrator. Overall an easy and quick process.

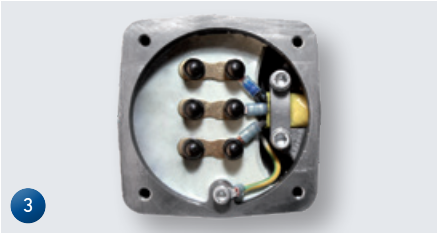

3

Housing and terminal box are casted as one piece to withstand heavy duty. Part of the delivery is a special cable with protective rubber sleeve. In addition a strain relief within the terminal box protects the cable connection.

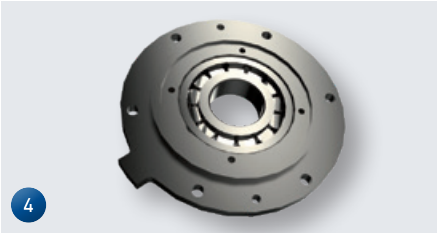

4

The vibrators are principally equipped with strongly dimensioned bearings with increased load bearing capacity and increased bearing clearance. The very solid designed bearing brackets assure a secure and durable transfer of the centrifugal force. Both together guarantee a reliable and a long-lasting product.

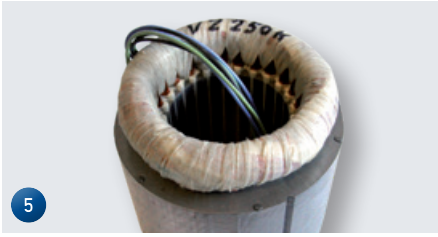

5

The winding of the vibrating motors are always well dimensioned. This guarantees more than enough power for the centrifugal force which has to be generated. To assure absolute vibration resistance the winding ends are bandaged and vacuum soaked and the channels are sealed with slot wedges.

6

The mounting base of the KNAUER vibrators were designed exceptionally high. This allows fastening with long screws, which have a sufficient stretch length to guarantee a durable, vibration resistant mounting.

For the use of vibrators in ‚battery' formworks or in other tight spaces very small housing designs are available.

7

Field of application

Vibrating table with coupled vibrators for the production of dry cast concrete elements.

Formworks for long concrete elements.

Palisade mould for mobile block making machine with 2 Tornado-Vibrators (Front and back side).

Four vibrating beams with 2 vibrators each for the production of large-sized concrete elements.

Cleaning of filter elements with pendulum vibrator.

Small formulary for dimensioning of rigid oscillating systems

DEFINITION	FORMULA SYSMBOL	MEASURING UNIT
Centrifugal force of vibrator(s)	F_Z	N
Working force of vibrator(s)	M_A	kgcm
Mass/weight of the vibrator(s)	m_R	kg
Synchronous speed (frequency) of the vibrator(s)	n	min-1
Displacement of the construction	s	cm
Weight of the vibrating construction (without vibrator(s))	m	kg
Working moment of the vibrating construction with vibrator(s)	M_G	kgcm
Acceleration as multiple of force of gravity	a	g
The total values for working force, centrifugal force and vibrator weight depend on the amount of vibrators used.		
1) The displacement (double amplitude) results in:		$s = M_A / (m_R + m)$
2) Acceleration of the vibrating construction at synchronous rpm:		$a = F_Z / ((m_R + m) * 9{,}81)$

SERIES A Pendulum Vibrator

The vibrators of the Series A generate instead of a circular force an elliptical, almost linear force. This is possible due to an elastic swivel joint on the mounting base of these vibrators. Through this only one pendulum vibrator instead of two standard vibrators can be used for some applications. Fields of application are e.g.: Vibrating troughs and screens, Bunker vibration, shaking stations.

Options:

- Power supply: 42 – 690 V
- Thermistor protection PTC 120°
- Individual color
- Other Temperature range

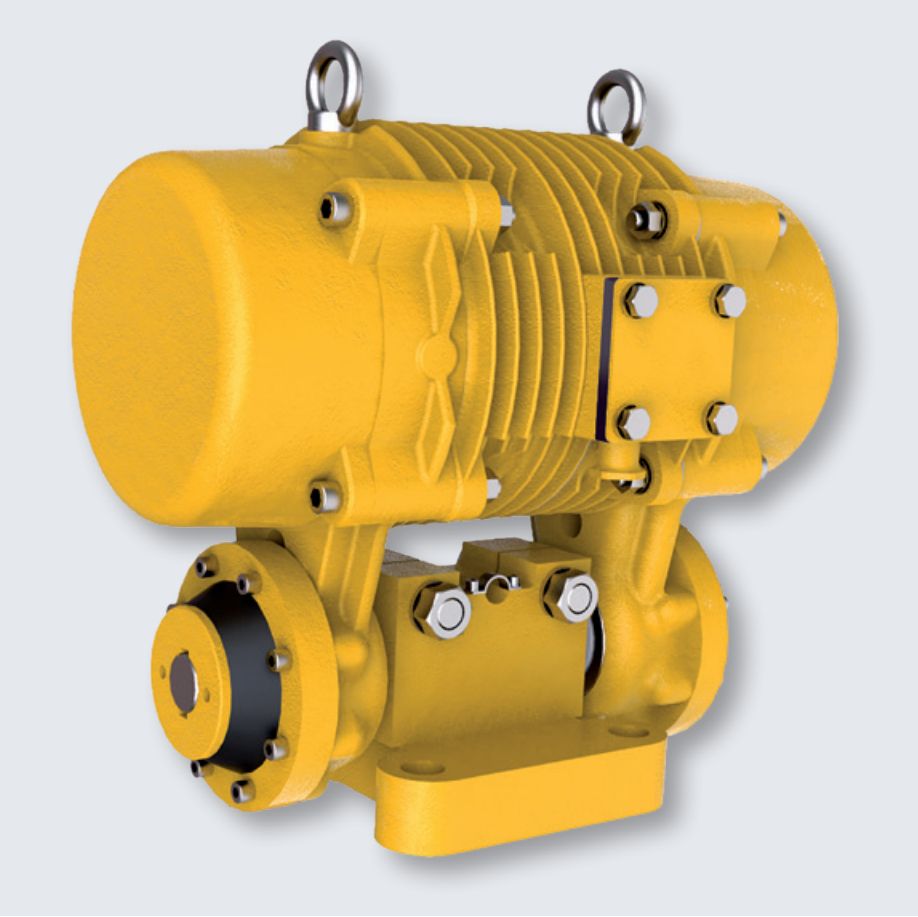

3000 U/min				400 V / 50 Hz														
Type	Centrif. force N	Work.mom. kgcm	Power W	Current A	Dimensions in mm a	b	c	d	e	f	g	h	i	l	m	Fig.	Weight kg	ID.-No
A 80/200	2000	3,9	120	0,23	80	80	11,5	108	196	60	94	180	170	17	108	D	12,0	514070
A 200/600	6000	11,9	310	0,57	110	110	18	146	234	76	110	238	210	24	150	D	24,0	514071
A 400/1000	10000	19,8	520	1,00	110	110	18	150	294	88	116	277	240	36	150	D	37,0	514072
A 700/1700	17000	33,7	1800	3,40	160	160	27	210	442	108	146	378	285	45	216	D	76,0	514327
A 1000/2500	25000	50,0	1800	3,40	160	160	27	210	457	130	159	420	330	45	216	D	110,0	514074

3600 U/min				460 V / 60 Hz														
Type	Centrif. force N	Work.mom. kgcm	Power W	Current A	Dimensions in mm a	b	c	d	e	f	g	h	i	l	m	Fig.	Weight kg	ID.-No
A 80/200	2000	2,7	120	0,20	80	80	11,5	108	196	60	94	180	170	17	108	D	12,0	514193
A 200/600	6000	8,2	310	0,50	110	110	18	146	234	76	110	238	210	24	150	D	24,0	614071
A 400/1000	10000	13,8	520	0,88	110	110	18	150	294	88	116	277	240	36	150	D	37,0	514308
A 700/1700	17000	23,4	1800	3,00	160	160	27	210	442	108	146	378	285	45	216	D	76,0	614327
A 1000/2500	25000	34,7	1800	3,40	160	160	27	210	457	130	159	420	330	45	216	D	110,0	514456

1500 U/min				400 V / 50 Hz															
Type	Centrif. force N	Work.mom. kgcm	Power W	Current A	Dimensions in mm a	b	c	d	e	f	g	h	i	l	m	Fig.	Weight kg	ID.-No
A 400 n 14	4000	31,7	395	0,75	110	110	18	150	356	88	116	277	240	36	150	D	42,0	514075
A 1000 n 14	10000	79,4	1800	3,70	160	160	27	210	442	108	146	378	285	45	216	D	94,0	514350
A 1800 n 14	1800	143,1	1800	3,70	160	160	27	210	457	130	159	420	330	45	216	D	125,0	514077
A 3400 n 14	34000	270,0	1800	3,70	160	160	27	210	472	142	159	420	342	45	216	D	130,0	514285
A 3900 n 14	39000	310,0	1800	3,70	160	160	27	210	508	142	159	420	342	45	216	D	140,0	510855

1800 U/min				460 V / 60 Hz															
Type	Centrif. force N	Work.mom. kgcm	Power W	Current A	Dimensions in mm a	b	c	d	e	f	g	h	i	l	m	Fig.	Weight kg	ID.-No
A 400 n 14	4000	22,0	395	0,66	110	110	18	150	356	88	116	277	240	36	150	D	42,0	614075
A 1000 n 14	10000	55,2	1800	3,25	160	160	27	210	442	108	146	378	285	45	216	D	94,0	614350
A 1800 n 14	18000	99,3	1800	3,25	160	160	27	210	457	130	159	420	330	45	216	D	125,0	614077
A 3400 n 14	34000	187,5	1800	3,25	160	160	27	210	472	142	159	420	342	45	216	D	130,0	614285
A 3900 n 14	39000	215,2	1800	3,25	160	160	27	210	508	142	159	420	342	45	216	D	140,0	614855

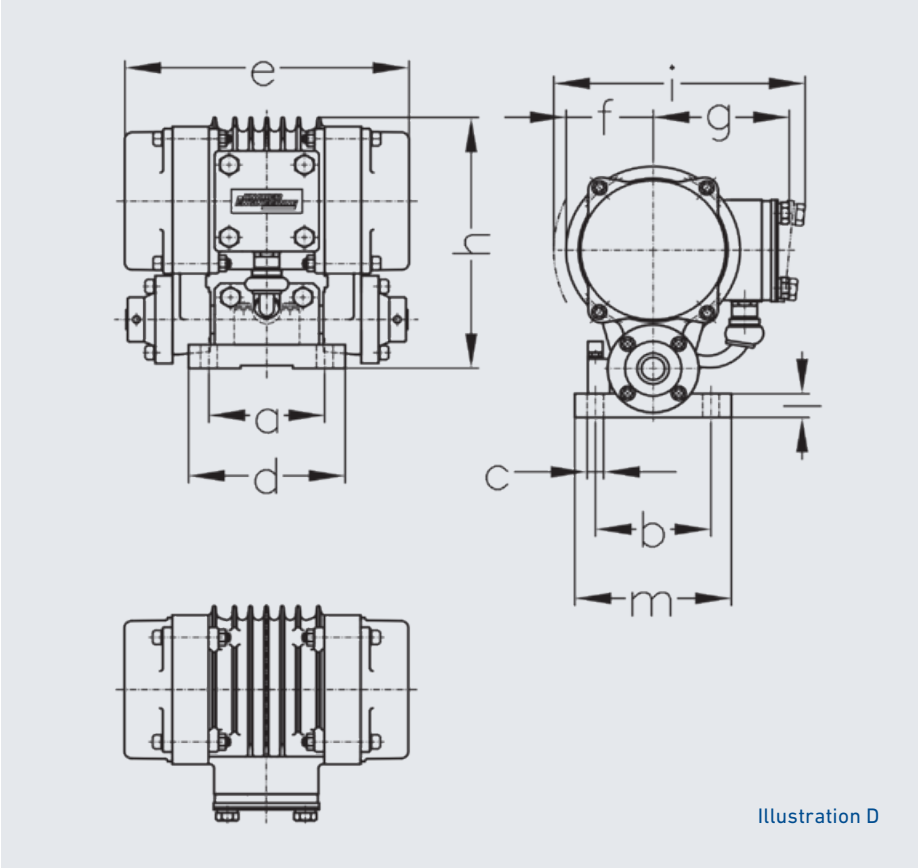

Illustration D

SERIES R Compact design

The compact design of the Series R generates high centrifugal forces at minimum space requirement. This qualifies the Series R especially for the use in machines, e.g. as ram vibration of block making machines. Further fields of application are vibrating tables and battery formworks in the concrete industry.

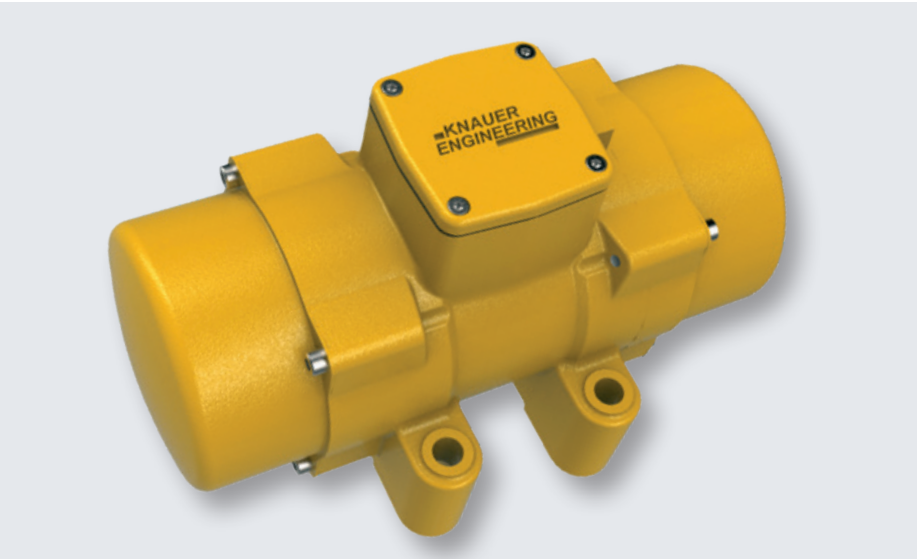

Options:

- Power supply: 42 – 690 V
- Thermistor protection PTC 120°
- Individual color
- Other Temperature range
- Coupling of vibrators (Page 15)
- Selfcooling system

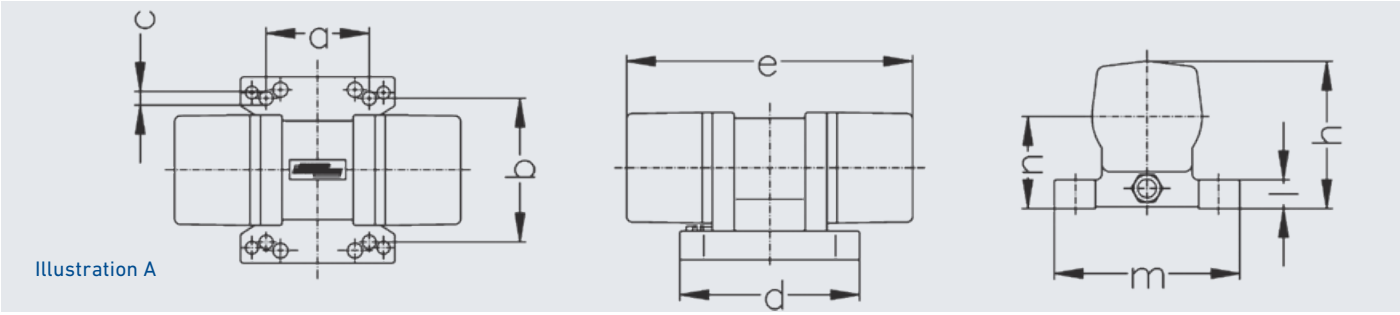

Illustration A

3000 U/min				400 V / 50 Hz															
Type	Centrif. force N	Work.mom. kgcm	Power W	Current A	Dimensions in mm a	b	c	d	e	h	l	m	n	o	r	Fig.	Weight kg	ID.-No
RZ 5	500	1,0	95	0,17	65	85	9,5	85	170	110	25	120	70	-	-	A	3,6	514006
					60	100	9,5											
RZ 15	1760	3,7	160	0,29	115	135	11	157	215	128	25	162	80	-	-	A	6,0	514008
					135	115	11											
					124	110	11											
					65	140	13											
RZ 30	2860	6,0	160	0,29	90	125	13	135	250	128	25	162	80	-	-	A	6,7	514009
					65	140	13											
					115	135	11											
RZ 65	6500	12,9	540	1,10	90	154	13	122	285	176	50	186	66	95	100	B*	19,0	514096
RZ 65 S	6500	12,9	540	1,10	60	125	13	84	285	176	105	145	66	95	100	B*	19,5	516241
					65	125												516390
					90	125												516391
RZ 120	12000	23,9	960	1,85	100	180	17	155	372	207	112	225	83	125	100	B*	30,0	514097
RZ 165 S	16500	32,8	960	1,85	100	180	17	155	372	207	112	225	83	125	100	B*	30,0	516242
					120	170												516392
RZ 165	16500	32,8	960	1,85	100	200	17	143	372	207	72	240	83	125	100	B*	31,5	514098

* Illustration B page 8

3600 U/min				460 V / 60 Hz															
Type	Centrif. force N	Work.mom. kgcm	Power W	Current A	Dimensions in mm a	b	c	d	e	h	l	m	n	o	r	Fig.	Weight kg	ID.-No
RZ 5	500	0,7	95	0,15	65	85	9,5	85	170	110	25	120	70	-	-	A	3,6	614006
					60	100	9,5											
RZ 15	1760	2,5	160	0,26	115	135	11	157	215	128	25	162	80	-	-	A	6,0	614008
					135	115	11											
					124	110	11											
					65	140	13											
RZ 30	2860	4,1	160	0,26	90	125	13	135	250	128	25	162	80	-	-	A	6,7	614009
					65	140	13											
					115	135	11											
RZ 65	6500	9,0	540	1,00	90	154	13	122	285	176	50	186	66	95	100	B*	19,0	614096
RZ 65 S	6500	9,0	540	1,00	60	125	13	84	285	176	105	145	66	95	100	B*	19,5	616241
					65	125												616390
					90	125												616391
RZ 120	12000	16,6	960	1,63	100	180	17	155	372	207	112	225	83	125	100	B*	30,0	614097
RZ 165 S	16500	22,8	960	1,63	100	180	17	155	372	207	112	225	83	125	100	B*	30,0	616242
					120	170												616392
RZ 165	16500	22,8	960	1,63	100	200	17	143	372	207	72	240	83	125	100	B*	31,5	614098

1500 U/min				400 V / 50 Hz															
Type	Centrif. force N	Work.mom. kgcm	Power W	Current A	Dimensions in mm a	b	c	d	e	h	l	m	n	o	r	Fig.	Weight kg	ID.-No
RV 30	3750	30,0	450	0,83	100	180	18	140	350	138	40	215	70	-	-	B*	19,0	514030
RV 50	5000	39,8	860	1,70	100	180	17	155	384	207	112	225	83	127	100	B*	32,0	516079
					120	170												516393
RV 75	7500	56,6	860	1,70	100	180	17	155	480	207	112	225	83	190	100	B*	34,5	514036
					120	170												516394
RV 95	9500	75,6	860	1,70	100	200	17	143	480	207	72	240	83	190	100	B*	37,0	514037
RV 140	14500	115,0	1400	2,70	120	250	22	170	430	240	55	300	110	-	-	B*	54,0	514034

1800 U/min				460 V / 60 Hz															
Type	Centrif. force N	Work.mom. kgcm	Power W	Current A	Dimensions in mm a	b	c	d	e	h	l	m	n	o	r	Fig.	Weight kg	ID.-No
RV 30	3750	20,8	450	0,73	100	180	18	140	350	138	40	215	70	-	-	B*	19,0	614030
RV 50	5000	27,6	860	1,50	100	180	17	155	384	207	112	225	83	127	100	B*	32,0	616079
					120	170												616393
RV 75	7500	39,3	860	1,50	100	180	17	155	480	207	112	225	83	190	100	B*	34,5	614036
					120	170												616394
RV 95	9500	52,5	860	1,50	100	200	17	143	480	207	72	240	83	190	100	B*	37,0	614037
RV 140	14500	79,8	1400	2,38	120	250	22	170	430	240	55	300	110	-	-	B*	54,0	614034

* Illustration B page 8

SERIES R-HF High frequency vibrators with inverter

The High Frequency vibrators of this series have to be operated with a frequency converter or inverter. This allows a dynamic rpm adjustment during operation and as a result a change of the oscillation frequency. KNAUER offers for the R-HF Series matching standard or custom-made power supplies.

Options:

- Power supply: 42 – 690 V
- Thermistor protection PTC 120°
- Individual color
- Other Temperature range
- Coupling of vibrators (Page 15)

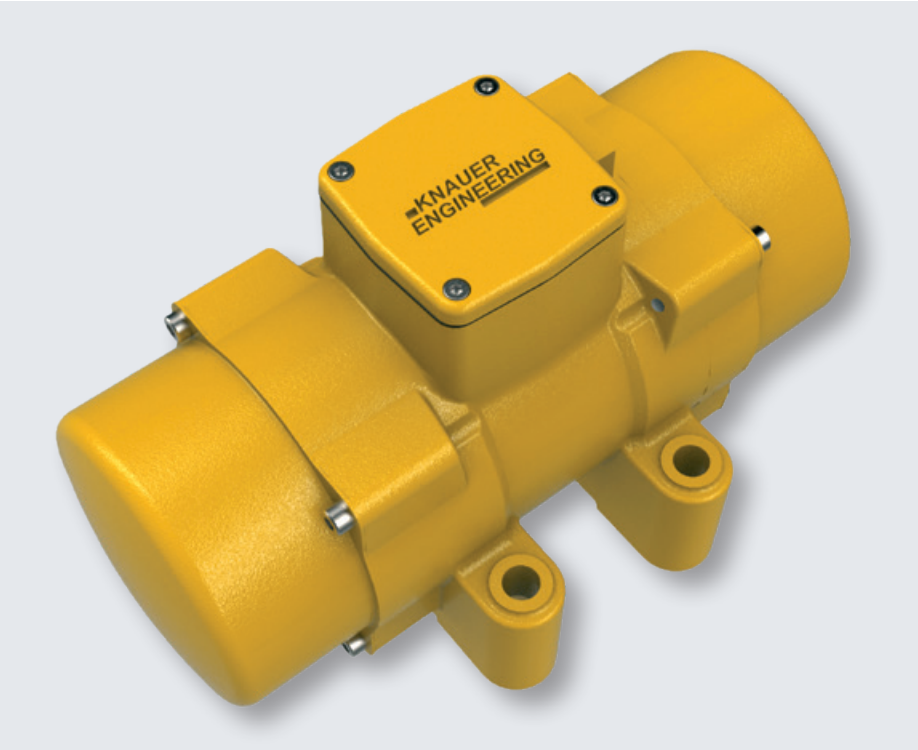

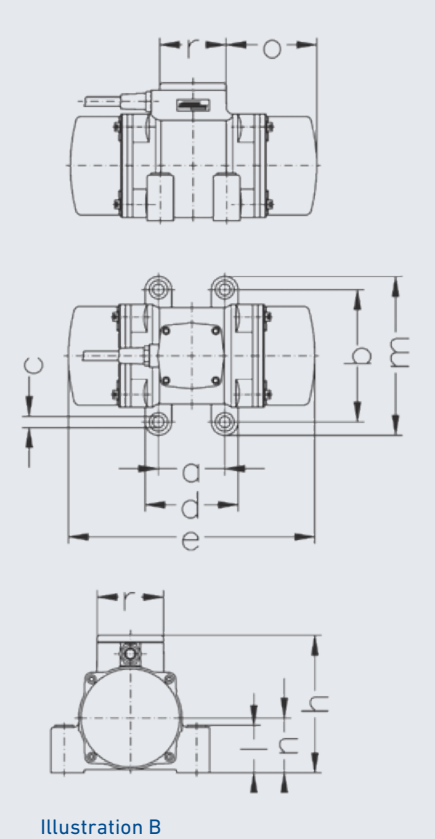

Illustration B

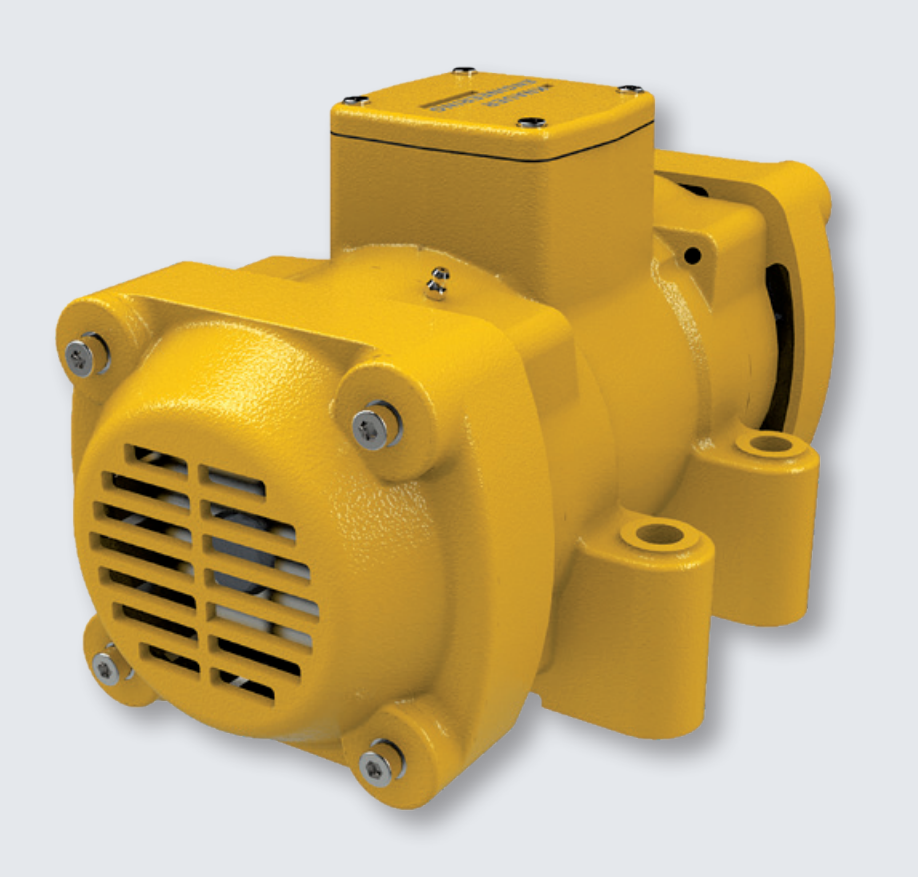

6000 U/min				230 V / 50 Hz															
Type	Centrif. force N	Work.mom. kgcm	Power W	Current A	Dimensions in mm a	b	c	d	e	h	l	m	n	o	r	Fig.	Weight kg	ID.-No
RZHF 40	4000	2,1	275	0,50	90	125	13	135	250	128	25	162	80	-	-	A*	6,7	514093
					65	140	13											
					115	135	11											
RZHF 100	10000	5,1	950	1,90	90	154	13	122	285	176	50	186	66	95	100	B	19,0	514099
RZHF 100 S	10000	5,1	950	1,90	60	125	13	84	285	176	105	145	66	95	100	B	19,0	514157
					90	125												516395
					65	125												516396
RZHF 140 P	14000	7,2	950	1,90	90	154	13	122	285	176	50	186	66	95	100	B	19,0	516397
RZHF 140 S	14000	7,2	1650	3,20	100	180	17	155	372	207	112	225	83	125	100	B	31,0	514100
					120	170												516398
RZHF 200 S	20000	10,2	1650	3,20	100	180	17	155	372	207	112	225	83	125	100	B	31,0	516244
					120	170												516399
RZHF 200	20000	10,2	1650	3,20	100	200	17	143	372	207	72	240	83	125	100	B	31,0	514101

6000 U/min				265 V / 60 Hz															
Type	Centrif. force N	Work.mom. kgcm	Power W	Current A	Dimensions in mm a	b	c	d	e	h	l	m	n	o	r	Fig.	Weight kg	ID.-No
RZHF 40	4000	2,1	275	0,44	90	125	13	135	250	128	25	162	80	-	-	A*	6,7	614093
					65	140	13											
					115	135	11											
RZHF 100	10000	5,1	950	1,67	90	154	13	122	285	176	50	186	66	95	100	B	19,0	614099
RZHF 100 S	10000	5,1	950	1,67	60	125	13	84	285	176	105	145	66	95	100	B	19,0	614157
					90	125												616395
					65	125												616396
RZHF 140 P	14000	7,2	950	1,67	90	154	13	122	285	176	50	186	66	95	100	B	19,0	616397
RZHF 140 S	14000	7,2	1650	2,82	100	180	17	155	372	207	112	225	83	125	100	B	31,0	614100
					120	170												616398
RZHF 200 S	20000	10,2	1650	2,82	100	180	17	155	372	207	112	225	83	125	100	B	31,0	616244
					120	170												616399
RZHF 200	20000	10,2	1650	2,82	100	200	17	143	372	207	72	240	83	125	100	B	31,0	614101

6000 U/min				250 V / 200 Hz															
Type	Centrif. force N	Work.mom. kgcm	Power W	Current A	Dimensions in mm a	b	c	d	e	h	l	m	n	o	r	Fig.	Weight kg	ID.-No
RVHF 100	10000	5,1	1000	3,10	90	154	13	122	285	176	50	186	66	95	100	B	19,0	514081
RVHF 100 S	10000	5,1	1000	3,10	60	125	13	84	285	176	105	145	66	95	100	B	19,0	514082
					90	125	13											516428
					65	125	13											516439
RVHF 140 P	14000	7,2	1000	3,10	90	154	13	122	285	176	50	186	66	95	100	B	19,0	516420
RVHF 140 S	14000	7,2	1200	3,60	100	180	17	155	372	207	112	225	83	125	100	B	31,0	514168
					120	170	17											516480
RVHF 200	20000	10,2	1500	4,50	100	200	17	143	372	207	72	240	83	125	100	B	31,0	514067
RVHF 200 S	20000	10,2	1500	4,50	100	180	17	155	372	207	112	225	83	125	100	B	31,0	516421
					120	170												516422

* Illustration A page 6

SERIES V Champion for extreme loads

The very robust design of the Series V allows extremely high mechanical and electrical (Heat) loads, which occur particular in machines very short cycle times. Fields of application are e.g.: Table vibration of block making and pipe machines, shakeout machines or vibrating beams.

Options:

- Power supply: 42 – 690 V
- Thermistor protection PTC 120°
- Individual color
- Other Temperature range
- Coupling of vibrators (Page 15)

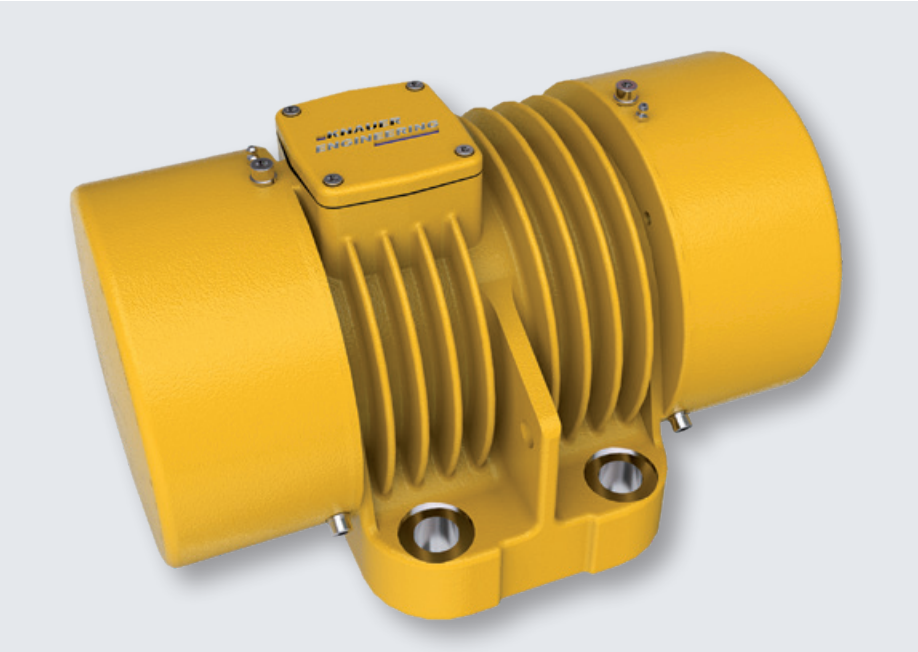

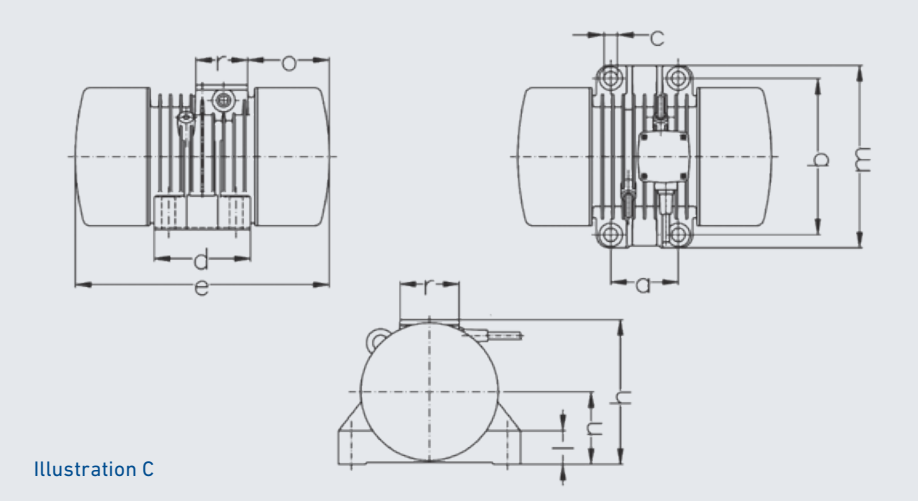

Illustration C

3000 U/min					400 V / 50 Hz													
Type	Centrif. force N	Work.mom. kgcm	Power W	Current A	Dimensions in mm a	b	c	d	e	h	l	m	n	o	r	Fig.	Weight kg	ID.-No
VZ 170	17000	33,7	1800	3,40	120	246	26	198	433	245	50	300	117	212	100	C	70,0	514055
VZ 200	20000	40,0	1800	3,40	120	246	26	198	433	245	50	300	117	212	100	C	71,5	514021
VZ 250	25000	50,0	2500	4,30	130	300	26	185	428	278	65	350	140	251	100	C	90,0	514024
VZ 300	30000	60,0	2500	4,30	130	300	26	185	428	278	65	350	140	251	100	C	92,0	514025
VZ 350	35000	70,0	3000	5,20	130	300	26	185	428	278	65	350	140	251	100	C	94,0	516243
VZ 400	40000	80,0	3000	5,20	130	300	26	185	428	278	65	350	140	251	100	C	96,0	514927
VZ 500	50000	102,0	3000	5,40	130	300	26	185	488	278	65	350	140	251	100	C	98,0	516423
VZ 600	60000	120,0	3000	5,60	130	300	26	185	488	278	65	350	140	251	100	C	100,0	516283

3600 U/min				460 V / 60 Hz															
Type	Centrif. force N	Work.mom. kgcm	Power W	Current A	Dimensions in mm a	b	c	d	e	h	l	m	n	o	r	Fig.	Weight kg	ID.-No
VZ 170	17000	23,4	1800	3,00	120	246	26	198	433	245	50	300	117	212	100	C	70,0	614055
VZ 200	20000	27,7	1800	3,00	120	246	26	198	433	245	50	300	117	212	100	C	71,5	614021
VZ 250	25000	34,7	2500	3,80	130	300	26	185	428	278	65	350	140	251	100	C	90,0	614024
VZ 300	30000	41,6	2500	3,80	130	300	26	185	428	278	65	350	140	251	100	C	92,0	614025
VZ 350	35000	48,6	3000	4,58	130	300	26	185	428	278	65	350	140	251	100	C	94,0	616243
VZ 400	40000	55,5	3000	4,58	130	300	26	185	428	278	65	350	140	251	100	C	96,0	614927
VZ 500	50000	70,8	3000	4,58	130	300	26	185	488	278	65	350	140	251	100	C	98,0	616423
VZ 600	60000	83,3	3000	4,93	130	300	26	185	488	278	65	350	140	251	100	C	100,0	616283

1500 U/min				400 V / 50 Hz															
Type	Centrif. force N	Work.mom. kgcm	Power W	Current A	Dimensions in mm a	b	c	d	e	h	l	m	n	o	r	Fig.	Weight kg	ID.-No
VV 170	17000	135,1	1800	3,70	120	246	26	198	433	245	50	300	117	212	100	C	80,0	514056
VV 210	21000	167,0	1800	3,70	120	246	26	198	477	245	50	300	117	234	100	C	83,0	514041
VV 250	25000	198,7	2600	5,40	130	300	26	185	488	278	65	350	140	281	100	C	105,0	514044
VV 320	32000	254,0	2600	5,40	130	300	26	185	488	278	65	350	140	281	100	C	111,0	514045

1800 U/min				460 V / 60 Hz															
Type	Centrif. force N	Work.mom. kgcm	Power W	Current A	Dimensions in mm a	b	c	d	e	h	l	m	n	o	r	Fig.	Weight kg	ID.-No
VV 170	17000	93,8	1800	3,26	120	246	26	198	433	245	50	300	117	212	100	C	79,0	514472
VV 21	21000	115,9	1800	3,26	120	246	26	198	477	245	50	300	117	234	100	C	82,0	514043
VV 250	25000	137,9	2600	4,76	130	300	26	185	488	278	65	350	140	281	100	C	104,0	614044
VV 320	32000	176,3	2600	4,76	130	300	26	185	488	278	65	350	140	281	100	C	111,0	514048

1000 U/min				400 V / 50 Hz															
Type	Centrif. force N	Work.mom. kgcm	Power W	Current A	Dimensions in mm a	b	c	d	e	h	l	m	n	o	r	Fig.	Weight kg	ID.-No
VS 140	14000	250,5	1400	3,20	120	246	26	198	553	245	50	300	117	272	100	C	94,0	514057
VS 170	17000	305,0	1400	3,20	120	246	26	198	613	245	50	300	117	302	100	C	102,0	514384
VS 200	20000	355,8	2000	4,00	130	300	26	185	552	278	65	350	140	312	100	C	123,0	514064
VS 250	25000	445,0	2000	4,00	130	300	26	185	621	278	65	350	140	347	100	C	133,0	514065

1200 U/min				460 V / 60 Hz															
Type	Centrif. force N	Work.mom. kgcm	Power W	Current A	Dimensions in mm a	b	c	d	e	h	l	m	n	o	r	Fig.	Weight kg	ID.-No
VS 140	14000	173,6	1400	2,82	120	246	26	198	553	245	50	300	117	272	100	C	92,0	614057
VS 170	17000	211,8	1400	2,82	120	246	26	198	613	245	50	300	117	302	100	C	100,0	614384
VS 200	20000	247,0	2000	3,52	130	300	26	185	552	278	65	350	140	312	100	C	121,0	614064
VS 250	25000	309,0	2000	3,52	130	300	26	185	621	278	65	350	140	347	100	C	131,0	614065

SERIES V-HF High frequency vibrators for high centrifugal forces

The high frequency vibrators of the Series V-HF have to be operated with a frequency converter or inverter. This allows a dynamic rpm adjustment during operation and as a result a change of the oscillation frequency. KNAUER offers for the V-HF Series matching standard or custom-made power supplies.

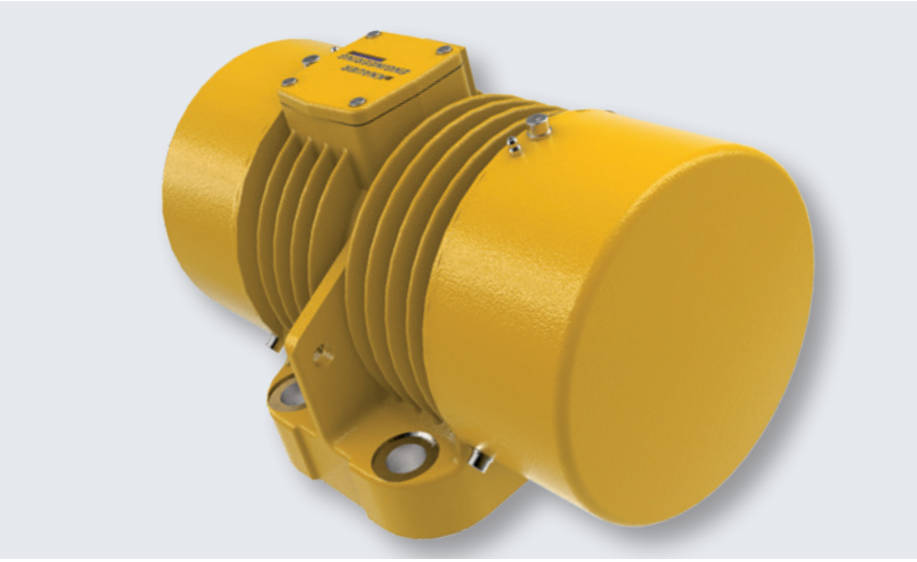

Options:

- Power supply: 42 – 690 V
- Thermistor protection PTC 120°
- Individual color
- Other Temperature range
- Coupling of vibrators (Page 15)

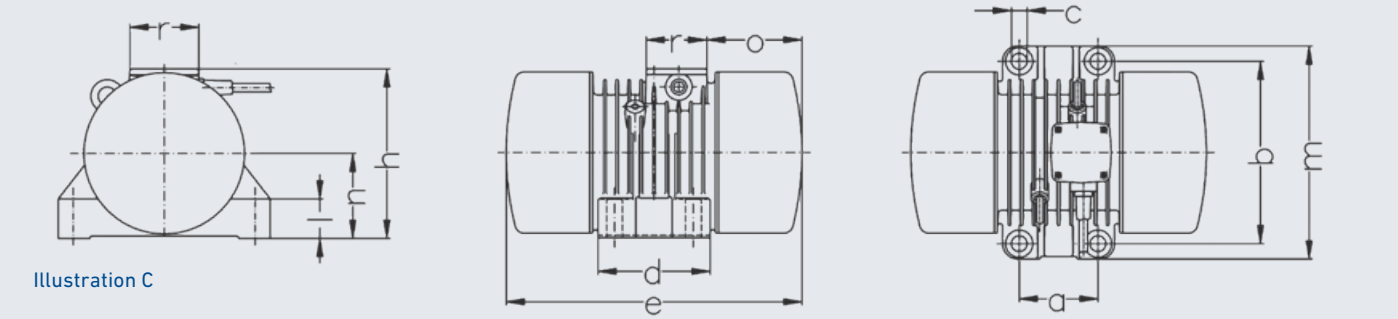

Illustration C

4800 U/min					230 V / 50 Hz													
Type	Centrif. force N	Work.mom. kgcm	Power W	Current A	Dimensions in mm a	b	c	d	e	h	l	m	n	o	r	Fig.	Weight kg	ID.-No
VZHF 200	20000	16,0	1800	5,90	120	246	26	198	433	245	50	300	117	212	100	C	69,0	516432
VZHF 300	30000	24,0	1800	5,90	120	246	26	198	433	245	50	300	117	212	100	C	70,0	516424
VZHF 400	40000	32,0	2500	7,50	130	300	26	185	428	278	65	350	140	251	100	C	88,0	516425
VZHF 500	50000	40,0	3000	8,00	130	300	26	185	428	278	65	350	140	251	100	C	90,0	516426
VZHF 600	60000	48,0	3500	9,00	130	300	26	185	428	278	65	350	140	251	100	C	92,0	516427

4800 U/min					265 V / 60 Hz													
Type	Centrif. force N	Work.mom. kgcm	Power W	Current A	Dimensions in mm a	b	c	d	e	h	l	m	n	o	r	Fig.	Weight kg	ID.-No
VZHF 200	20000	16,0	1800	5,20	120	246	26	198	433	245	50	300	117	212	100	C	68,0	616428
VZHF 300	30000	24,0	1800	5,20	120	246	26	198	433	245	50	300	117	212	100	C	69,0	616424
VZHF 400	40000	32,0	2500	6,60	130	300	26	185	428	278	65	350	140	251	100	C	87,0	616425
VZHF 500	50000	40,0	3000	7,00	130	300	26	185	428	278	65	350	140	251	100	C	89,0	616426
VZHF 600	60000	48,0	3500	7,92	130	300	26	185	428	278	65	350	140	251	100	C	91,0	616427

SPECIAL VIBRATORS

Tornado vibrator

The Tornado vibrator was designed especially for the mould and ram vibration of mobile block making machines. The specialty: Due to the use of different size belt pulleys on the vibrating elements, different interfering vibration frequencies are being generated. This way the unwanted synchronisation of the vibrating elements can be avoided, at what the generated forces are almost neutralized.

Centrifugal force: 2 x 2500 – 11000 N

RPM: 7010 + 6850 U/min

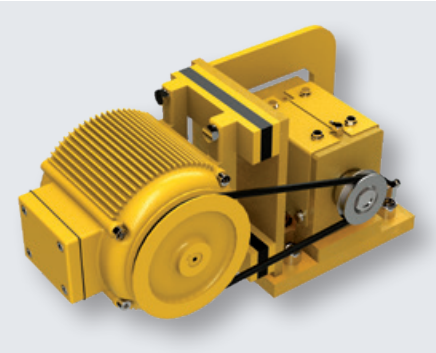

Centrifugal force: 2500 – 15000 N

RPM: 7010/6850/8315 U/min

Jumbo vibrator

This Jumbo vibrator was designed for the use in stationary block making machines. The compact design allows to achieve very high forces and therefore high acceleration values in limited space. Hereby the design of the vibrating tables is easier and weight saving. The mechanical synchronisation within the vibrator guarantees always a linear force output.

Centrifugal force: 27000 – 110000 N

RPM: 3800 – 5100 U/min

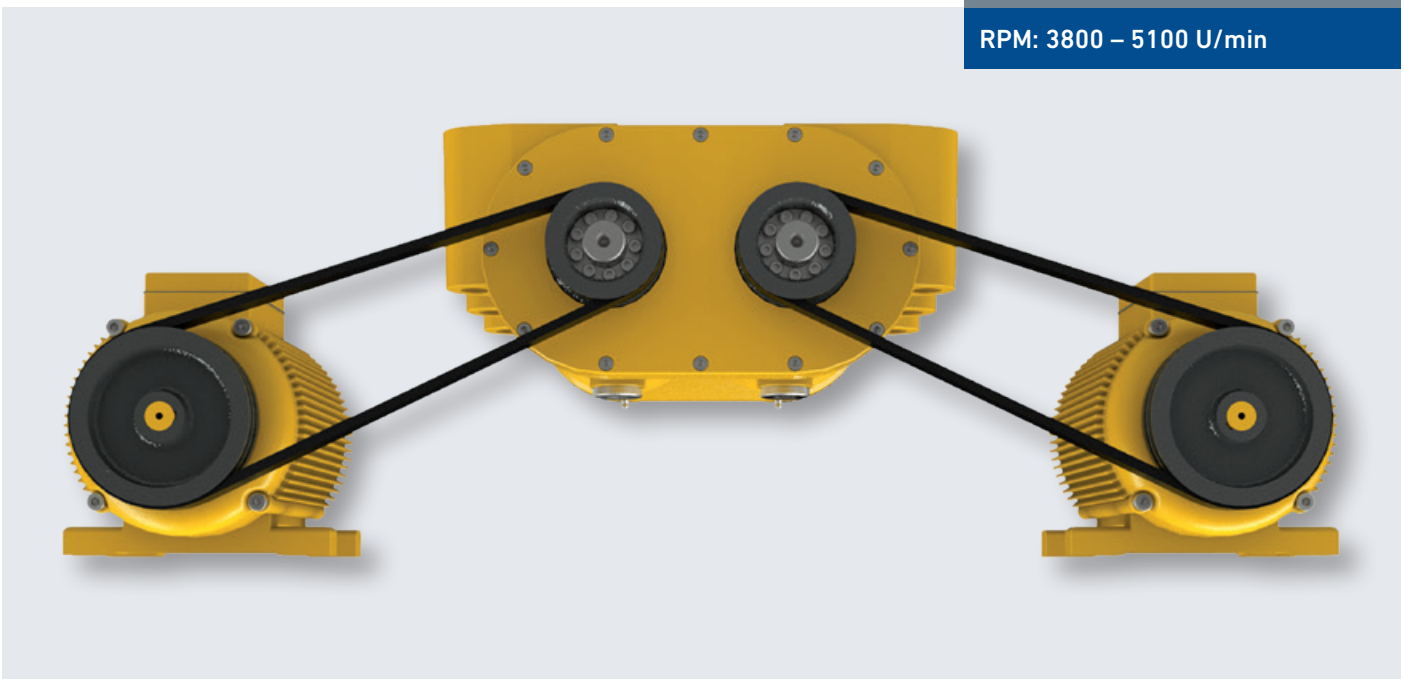

TURNOVER UNBALANCES

Some production processes require high forces for the compaction of the mixture, but afterwards much lower forces for the de-aeration. Both necessary settings often cannot be realised just by changing the rpm. Turnover unbalances provide, depending on the direction of rotation two different unbalance values in one vibrator. Due to the fact that the unbalances for both directions are also adjustable, ideal force settings for different process requirements can be found.

Centrifugal force: 10000 – 60000 N

RPM: 1000 – 6000 U/min

Adjustable turnover unbalances

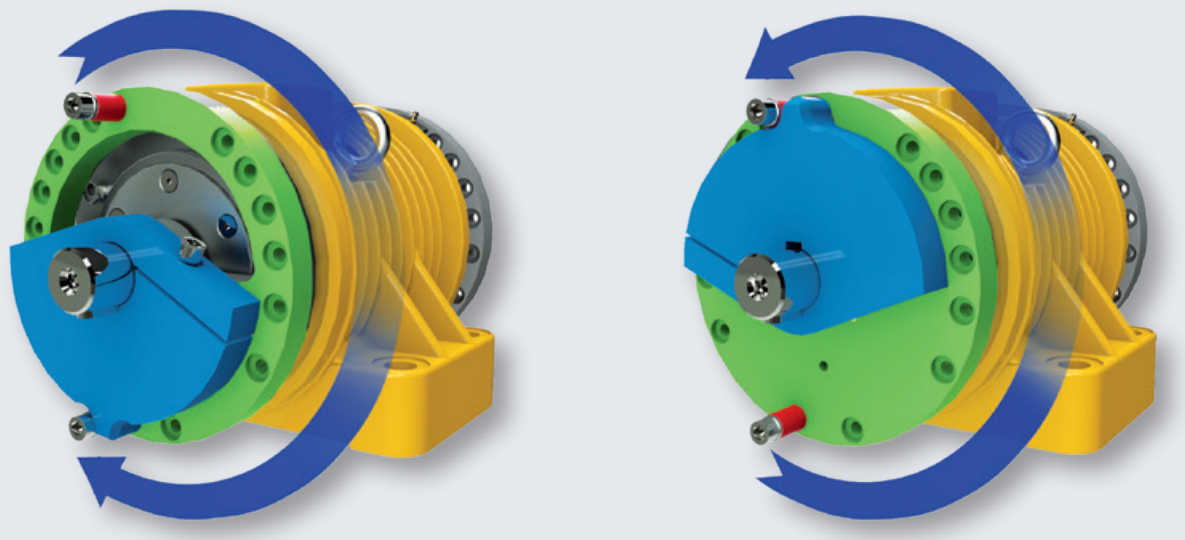

Fixed turnover unbalances

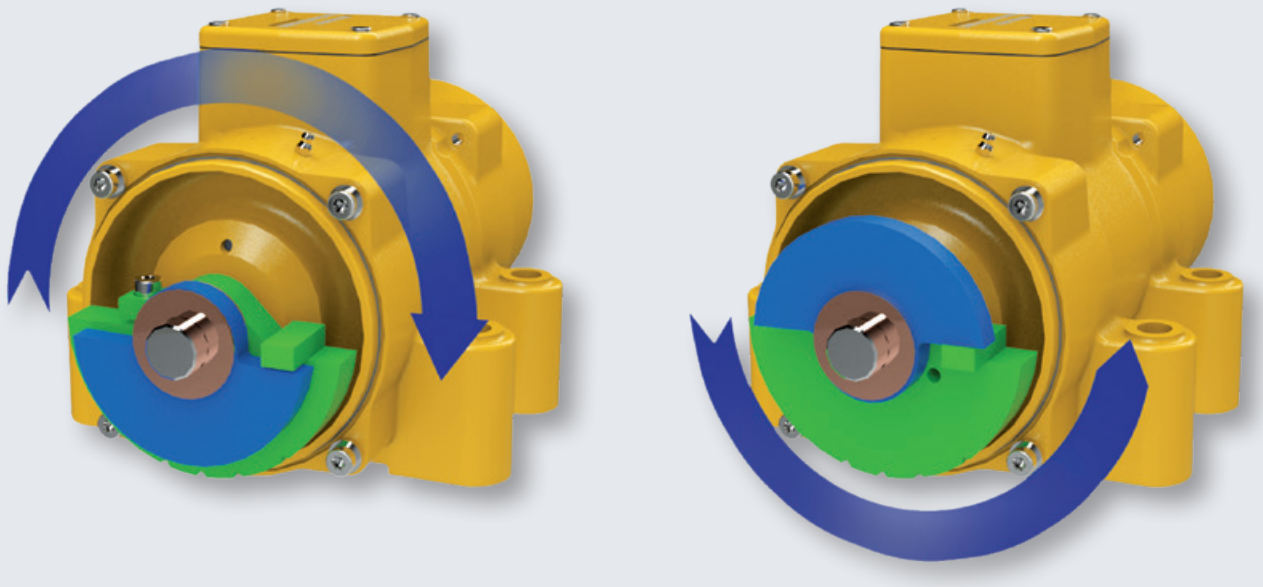

COUPLING of vibrators

For some applications, e.g. linear acting vibrating tables, it is not always useful to generate the needed force with only two vibrators. Especially for larger vibrating tables it is often useful to induce the force evenly over the complete area of the table. This can be easily achieved with coupled vibrators from KNAUER. Often weight can also be saved at the same time, because several small vibrators mostly weigh less than two big vibrators with the same force. Hereby the total needed forces decrease, because only the reduced total weight of the table has to be vibrated.

Coupling Centaflex size 1

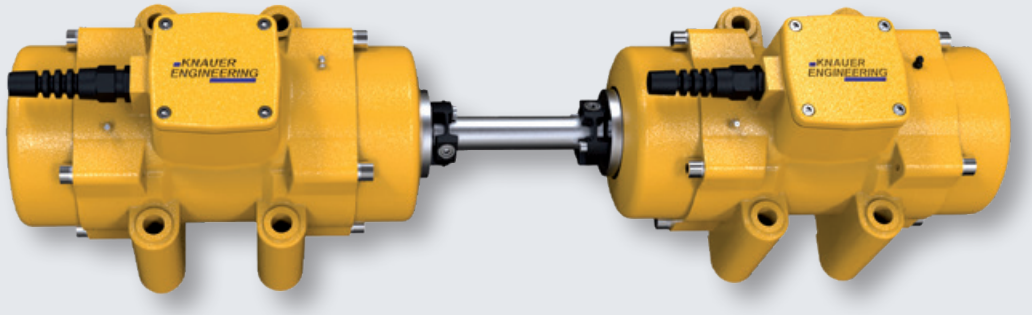

Coupling Rotex

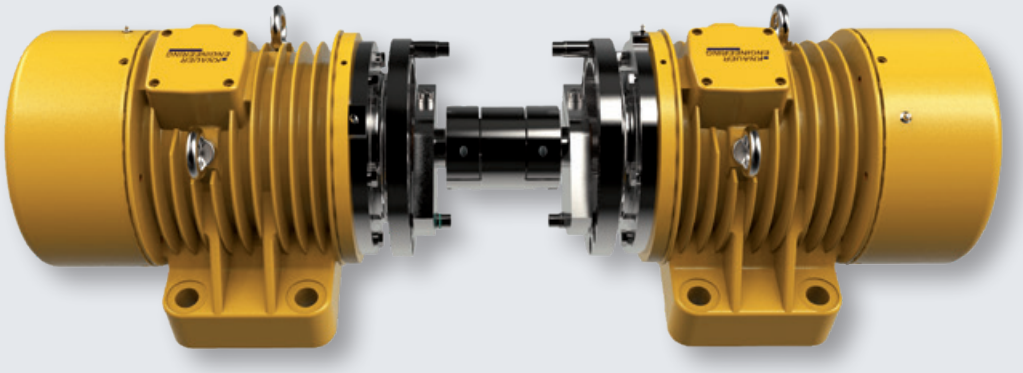

Coupling Centaflex size 8

Field of application for unbalance motors

Mobile block making machines

Detailed information can be found in our brochure on: www.knauer.de

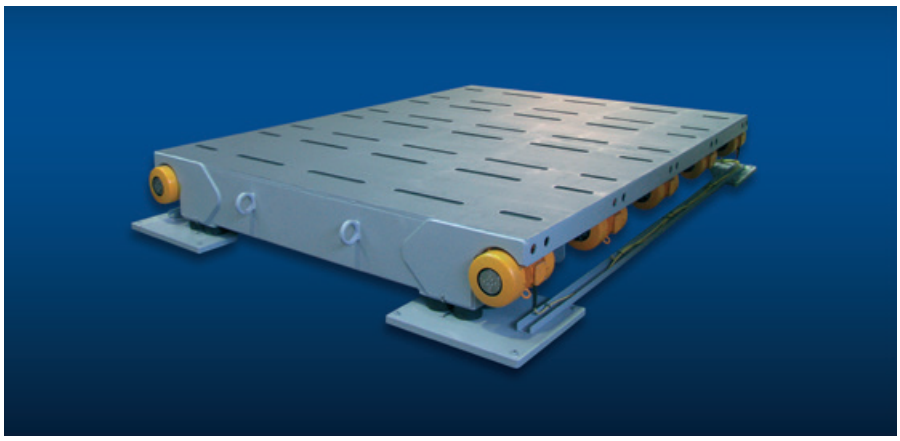

Vibrating tables

Detailed information can be found in our brochure on: www.knauer.de

Knauer Engineering GmbH
Industrieanlagen & Co. KG

Elbestraße 11 – 13 · D-82538 Geretsried · Germany
Tel.: +49 (0) 8171 62950 · Fax: +49 (0) 8171 64545
E-Mail: info@knauer.de · Web: www.knauer.de

We reserve the right to introduce modifications rendered necessary in the course of further technological development

© 2019 KNAUER Engineering